Euclid Universal™
A Kinetek Company®

MC225
AC right angle gearmotor

Right angle, single reduction, AC gearmotor

Applications
- Printing press
- Pumps
- Conveyors
- Mixers

Features
- TEFC motor construction
- Corrosion resistant aluminum primary and cast iron final gearbox housing
- Full ball bearing construction
- Gear oil lubrication - vented
- Precision machined gearing for smooth, efficient, long life operation
- Multiple output speeds available
- Several voltage/phase options
- Oil seals on axle shafts for protection against dirt intrusion

Options
- Ratio
- Motor HP
- Motor phase (single or 3 phase)
- 2 Foot mount configurations
- Custom output shaft (per spec)

Specifications
- Bi-directional operation
- 1/3, 1/2, 3/4, 1 and 2 hp models
- Voltage: 115/208/230/460 VAC
- Motor: 48F 1-phase, 56F 1-phase & 3-phase
- Insulation class: B
- Ratios: 11:1, 18:1, 21:1, 26:1, 31:1, 39:1, 58:1
- Output speeds: 30-158 rpm
- Lubrication: Gear Oil
- Weight: 31-58 lbs
- Agency approvals: UL/CSA

MADE TO ORDER, BUILT TO LAST

For the past 50 years, Euclid Universal has worked to establish its position as the global leader in the power transmission field. Working with diverse Original Equipment Manufacturers, Euclid designs and builds gear drive systems for special applications where off-the-shelf items will not fit or meet exacting rugged duty performance requirements. While the competition adapts drives originally designed for completely different purposes such as automotive windshield wipers and industrial conveyors, Euclid Universal produces gearmotors, gearheads, speed reducers and transaxles custom-made to meet the unique needs of each customer.

Our flexibility in engineering and production affords rapid response in design, prototype and production. Requirements for either low- or high-volume orders can be handled within our facility at competitive costs. We test for sound and vibration issues to assure pre-established requirements are met on each shipment.

MC225
AC right angle gearmotor

Specifications

Part Number	Phase	Voltage Frequency	Full Load Output rpm @ 60Hz	Input HP	Ratio In:Out	Dimensional View	Dimensional Ref. A Inches [mm]
256G6090D1/2-58	3	208-230/460V 50/60Hz	30	1/2	58:1	X	9.53 [242]
256G6090D1/2-39	3	208-230/460V 50/60Hz	45	1/2	39:1	X	9.53 [242]
256G6090D1/2-26	3	208-230/460V 50/60Hz	67	1/2	26:1	X	9.53 [242]
256G6090D1/2-18	3	208-230/460V 50/60Hz	97	1/2	18:1	X	9.53 [242]
256G6089D1-26	3	208-230/460V 50/60Hz	67	1	26:1	X	9.53 [242]
256G6089D1-18	3	208-230/460V 50/60Hz	97	1	18:1	X	9.53 [242]
256G6089D1-11	3	208-230/460V 50/60Hz	158	1	11:1	X	9.53 [242]
256G6089D1-39	3	208-230/460V 50/60Hz	45	1	39:1	X	9.53 [242]
256G6089D2-11	3	208-230/460V 50/60Hz	158	2	11:1	X	9.53 [242]
256G6075D3/4-31	1	115/208-230V 50/60Hz	56	3/4	31:1	Y	10.78 [274]
256G6075D3/4-21	1	115/208-230V 50/60Hz	83	3/4	21:1	Y	10.78 [274]
256G6090D1/2-47	3	208-230/460V 50/60Hz	37	1/2	47:1	X	9.53 [242]
256G6090D1/2-31	3	208-230/460V 50/60Hz	56	1/2	31:1	X	9.53 [242]
256G6090D1/2-21	3	208-230/460V 50/60Hz	83	1/2	21:1	X	9.53 [242]
256G6090D3/4-47	3	208-230/460V 50/60Hz	37	3/4	47:1	X	9.53 [242]
256G6090D3/4-31	3	208-230/460V 50/60Hz	56	3/4	31:1	X	9.53 [242]
256G6090D3/4-21	3	208-230/460V 50/60Hz	83	3/4	21:1	X	9.53 [242]
256G6089D1-31	3	208-230/460V 50/60Hz	56	1	31:1	X	9.53 [242]
256G6089D1-21	3	208-230/460V 50/60Hz	83	1	21:1	X	9.53 [242]
256G6090D3/4-39	3	208-230/460V 50/60Hz	45	3/4	39:1	X	9.53 [242]
256G6090D3/4-26	3	208-230/460V 50/60Hz	67	3/4	26:1	X	9.53 [242]
256G6090D3/4-18	3	208-230/460V 50/60Hz	97	3/4	18:1	X	9.53 [242]
256G6090D3/4-11	3	208-230/460V 50/60Hz	158	3/4	11:1	X	9.53 [242]
256G6075D1/2-58	1	115/208-230V 50/60Hz	30	1/2	58:1	Y	9.27 [235]
256G6075D3/4-39	1	115/208-230V 50/60Hz	45	3/4	39:1	Y	10.78 [274]
256G6075D3/4-26	1	115/208-230V 50/60Hz	67	3/4	26:1	Y	10.78 [274]
256G6075D3/4-18	1	115/208-230V 50/60Hz	97	3/4	18:1	Y	10.78 [274]
225G6065D1/2-11	1	115/208-230V 60Hz	158	1/2	11:1	Z	8.97 [228]
225G6065D1/2-18	1	115/208-230V 60Hz	97	1/2	18:1	Z	8.97 [228]
225G6065D1/2-21	1	115/208-230V 60Hz	83	1/2	21:1	Z	8.97 [228]
225G6065D1/2-26	1	115/208-230V 60Hz	67	1/2	26:1	Z	8.97 [228]
225G6065D1/2-31	1	115/208-230V 60Hz	56	1/2	31:1	Z	8.97 [228]
225G6065D1/2-39	1	115/208-230V 60Hz	45	1/2	39:1	Z	8.97 [228]
225G6065D1/3-18	1	115/208-230V 60Hz	97	1/3	18:1	Z	8.97 [228]
225G6065D1/3-21	1	115/208-230V 60Hz	83	1/3	21:1	Z	8.97 [228]
225G6065D1/3-26	1	115/208-230V 60Hz	67	1/3	26:1	Z	8.97 [228]
225G6065D1/3-31	1	115/208-230V 60Hz	56	1/3	31:1	Z	8.97 [228]
225G6065D1/3-39	1	115/208-230V 60Hz	45	1/3	39:1	Z	8.97 [228]
225G6065D1/3-58	1	115/208-230V 60Hz	30	1/3	58:1	Z	8.97 [228]

Dimensional View

X view

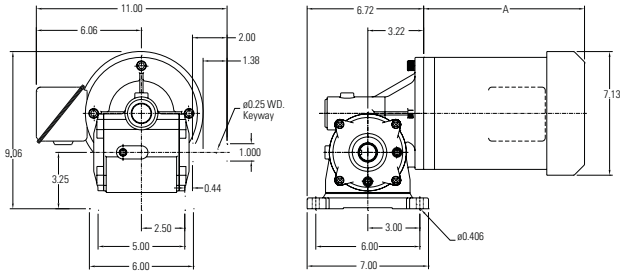

Y view

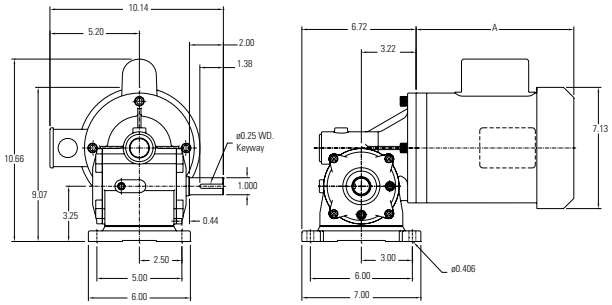

Z view

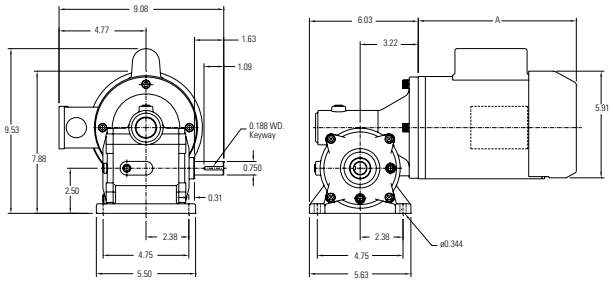

Euclid Universal™
A Kinetek Company®

Euclid Universal Corporation
30500 Bruce Industrial Parkway, Suite B
Solon, OH 44139
Phone 440-349-4083 / Fax 440-349-4894
www.kinetekinc.com

Contact:
Norm Zondervan
zondervann@imperialelectric.com